ufiSpace

# S9600-102XC

## Open Aggregation Router

**Hardware Installation Guide**

R1.5

# Table of Contents


**1 Overview ..... 1**
**2 Preparation ..... 2**
2.1 Installation Tools ..... 2
2.2 Installation Environment Requirements ..... 3
2.3 Preparation Check List ..... 4
**3 Package Contents ..... 5**
3.1 Accessory List ..... 5
3.2 Component Physical Information ..... 6
**4 Identifying Your System ..... 7**
4.1 S9600-102XC Overview ..... 7
4.2 PSU Overview ..... 7
4.3 Fan Overview ..... 8
4.4 Port Overview ..... 9
**5 Rack Mounting ..... 10**
**6 Installing Fan Modules ..... 13**
**7 Installing Power Supply Units ..... 14**
**8 Grounding the Router ..... 16**
**9 Connecting Power ..... 18**
9.1 DC Version ..... 18
9.2 AC Version ..... 20
**10 Verifying System Operation ..... 22**
10.1 Front Panel LED ..... 22
10.2 PSU FRU LED ..... 23
10.3 Fan FRU LED ..... 23
**11 Initial System Setup ..... 24**
**12 Cable Connections ..... 25**
12.1 Connecting the USB Extender Cable ..... 25
12.2 Connecting a Cable to the ToD Interface ..... 25
12.3 Connecting the GNSS Interface ..... 26
12.4 Connecting the 1PPS Interface ..... 26
12.5 Connecting the 10MHz Interface ..... 27
12.6 Connecting the Transceiver ..... 27
12.7 Installing an Antenna ..... 28
**13 Cautions and Regulatory Compliance Statements ..... 30**
13.1 Cautions and Regulatory Compliances ..... 30

# 1 Overview

The UfiSpace S9600-102XC is a high-performance, versatile, open disaggregated aggregation router. It is designed to address the changing needs of the next generation transport network as Telecoms make the transition from legacy technologies towards 5G.

Providing 25GE and 100GE services ports, the S9600-102XC platform can enable multiple application architectures required for high traffic loading in a 5G mobile Ethernet network. Due to its versatility, the S9600-102XC can be positioned in different parts of the network to perform aggregation, such as in the backhaul to aggregate BBU pooling or even as a Broadband Network Gateway (BNG) within the central office.

With the hardware fully supporting IEEE 1588v2 and SyncE synchronization, 1+1 redundancy hot-swappable components, and a high port density design, the S9600-102XC delivers high system reliability, Ethernet switching performance and intelligence to the network that helps reduce infrastructure and administrative costs.

This document describes the hardware installation process for S9600-102XC.

# 2 Preparation

## 2.1 Installation Tools

Phillips #2 Screw Driver

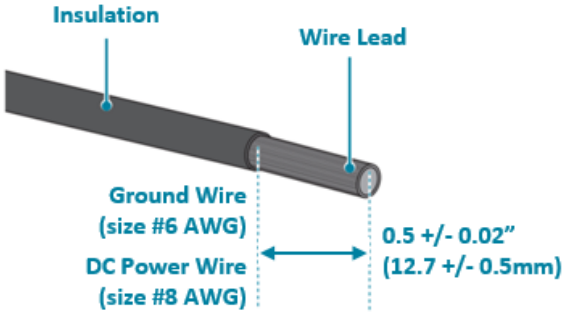


6-AWG green-and-yellow wire for grounding 8-AWG DC power wire

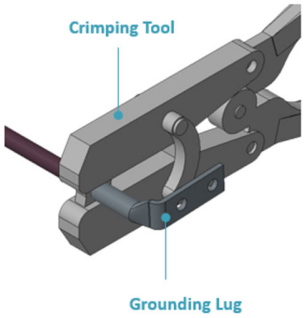


Crimping tool

Wire stripping tool

| | |
|---|---|
| ***Note*** | All illustrations within this document are for reference purposes only. Actual objects may differ. |

- PC with terminal emulation software. Refer to the "Initial System Setup" section for details.
  - Baud rate: 115200 bps
  - Data bits: 8
  - Parity: None
  - Stop bits: 1
  - Flow control: None

## 2.2 Installation Environment Requirements

- Power Reserve: The S9600-102XC power supply is available with:
  1. **DC Version:** 1+1 Redundant and hot swappable -40 to -75V DC power supply field replaceable unit or;
  2. **AC Version:** 1+1 Redundant and hot swappable 100 to 240V AC power supply field replaceable unit.

  To ensure the redundant feed power design functions properly, a field with dual power circuit is recommend with a reserve of at least 1300 watts on each power circuit.

- Space Clearance: The S9600-102XC width is 17.16 inches (43.6cm) and shipped with a rack mount brackets suitable for 19 inch (48.3cm) wide racks. The depth of the S9600-102XC chassis is 24 inches (60.9cm) without the field replaceable units (FRUs) and comes with adjustable check mounting rails suitable for rack depths of 21 inches (53.34cm) to 35 inches (88.9cm). The handle for the fan units will extend outwards by 1.15 inch (2.9cm) and the handle for the power supplies will extend outwards by 1.19 inches (3cm). Therefore, to accommodate the fan and power supply handles, cable routing, a minimum space clearance of 6 inches (15.2cm) is needed at the back and front of the S9600-102XC. A total minimum reserve depth of 36 inches (91.44cm) is required.

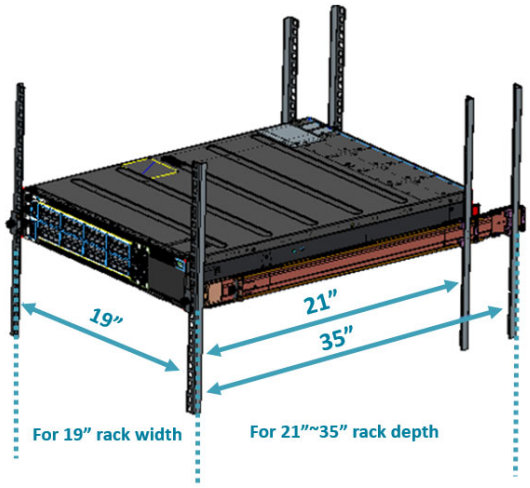


**Figure 1.**

- Cooling: The S9600-102XC airflow direction is front-to-back. Make sure the equipment on the same rack have the same airflow direction.

**Figure 2.**

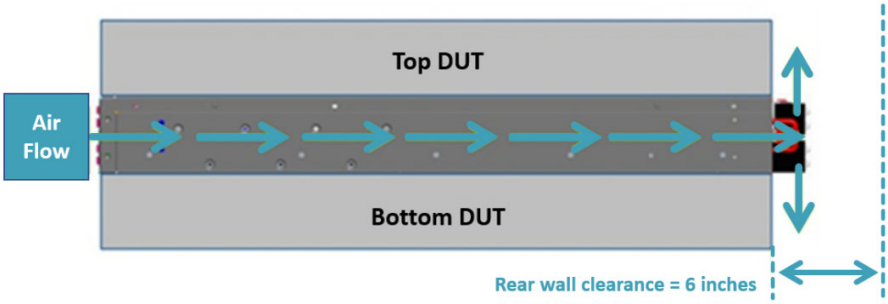


**Figure 3.**

## 2.3 Preparation Check List

| Task | Check | Date |
|---|---|---|
| **Power voltage and electric current requirements**<br>**DC version**: -40 to -75V DC, 40A maximum x2 or;<br>**AC version:** 100 to 240V AC, 12A maximum x2 | | |
| **Installation space requirements**<br>S9600-102XC requires 2RU (3.45”/8.8cm) in height, 19” (48.3cm) in width, and need a minimum reserve depth of 36 inches (91.44cm) | | |
| **Thermal requirements**<br>S9600-102XC working temperature is 0 to 45°C (32°F to 113°F), airflow direction is front-to-back | | |
| **Installation tools required**<br>#2 Philips Screwdriver, 6-AWG yellow-and-green wire stripper, and crimping tool | | |
| **Accessories required**<br>6-AWG Ground wire, 8-AWG DC power wire, PC with USB ports and terminal emulation software | | |

# 3 Package Contents

## 3.1 Accessory List

| Item | Description | Spec. & Dimensions | Qty. | Weight |
|---|---|---|---|---|
| 1 | Grounding Lug and Screw Kit | 1x Grounding Lug (# 6 AWG)<br>1.14” x 1.47” x 0.49”<br>(29 x 37.5 x 12.5mm)<br>2x Screws M4*L8.0mm<br>2x M4 Lock Washers | 1 set | 0.03lb (17g)/1 set |
| 2 | DC Input Lug<br>(DC version only) | 4 x DC Input Lugs (#8AWG)<br>0.35” x 0.77” x 0.49”<br>(8.8 x 19.5 x 12.5mm) | 1 set | 0.03lb (13.2g)/1 set |
| 3 | RJ45 to DB9 Female Cable | 8’ (2438mm) | 1 pcs | 0.23lb (105g)/1 pcs |
| 4 | Adjustable Mounting Rail (for 4 post) | 24.65” x 1.7” x 0.9”<br>(626 x 44 x 22mm)<br>(21”~35” rack depth) | 2 sets | 6.83lb (3.1kg)/2 sets<br>3.31lb (1.5kg)/1 set |
| 5 | Screw Kit (for sliding rail) | 2 x Screw M4.0*L5.5 | 1 set | 0.004lb (1.9g)/1 set |
| 6 | AC Power Cord<br>(AC version only) | 72.05” (1830mm) | 2 pcs | 1.43lb (650g)/ 2 pcs<br>0.71lb (325g)/1 pcs |
| 7 | SMB TO BNC Converter Cable | 11.81” (300mm) | 2 pcs | 0.08lb (36g)/2 pcs<br>0.04lb (18g)/1 pcs |
| 8 | USB 3.0 Cable | 7.87” (200mm) | 1 set | 0.03lb (17.2g)/1 pcs |

## 3.2 Component Physical Information

| Specification | Item | Description |
|---|---|---|
| Weight | Total package contents | 66.93lb (30.36kg) |
| | Chassis without FRU | 33.49lb (15.19kg) |
| | Power Supply Unit (PSU) | DC PSU: 2lbs (0.92kg) |
| | | AC PSU: 2lbs (0.92kg) |
| | Fan module | 1.1lb (498g) |
| | Ground lug | 0.03lb (13.2g) |
| | Adjustable mounting rail | 3.31lb (1.5kg) |
| | RJ45 to DB9 female cable | 0.23lb (105g) |
| | AC power cord (AC version only) | 0.71lb (325g) |
| | SMB TO BNC Converter Cable | 0.04lb (18g) |
| Dimension | S9600-102XC (W x D x H) | 17.16” x 24” x 3.45” (436 x 609.6 x 87.7mm) |
| | PSU (W x D x H) | 1.99” x 12.64” x 1.57” (50.5 x 321 x 39.9mm) |
| | Fan (W x D x H) | 3.2” x 4.8” x 3.19” (81 x 113 x 81.5mm) |

# 4 Identifying Your System

## 4.1 S9600-102XC Overview

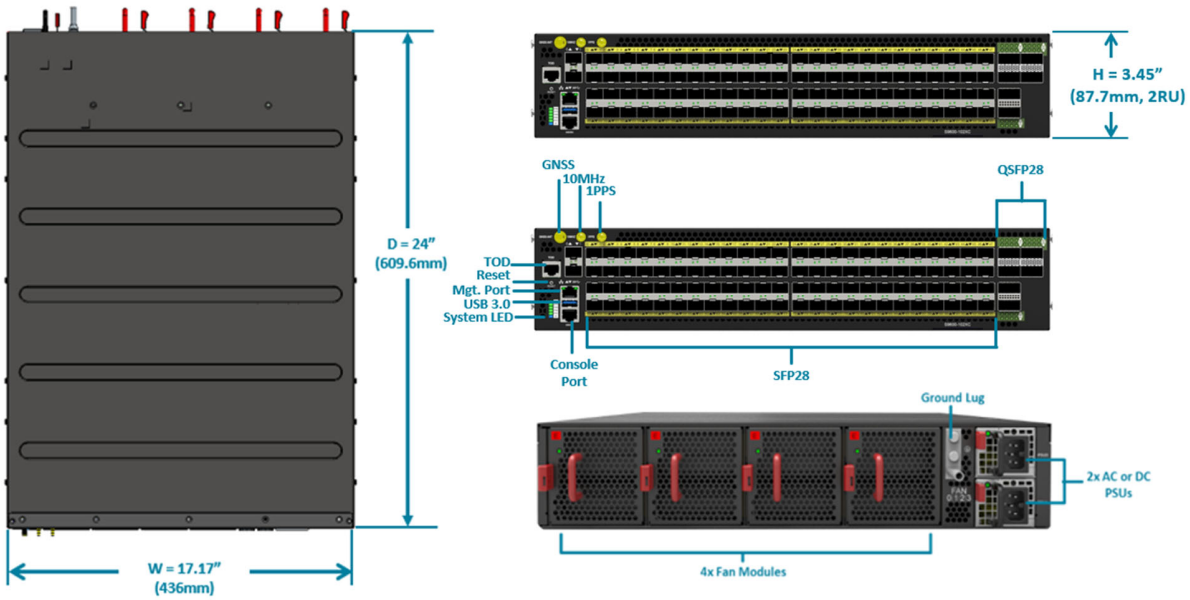


**Figure 4.**

## 4.2 PSU Overview

Power supply unit (PSU) with 1+1 Redundancy. Hot swappable, field replaceable unit (FRU).

AC Version:

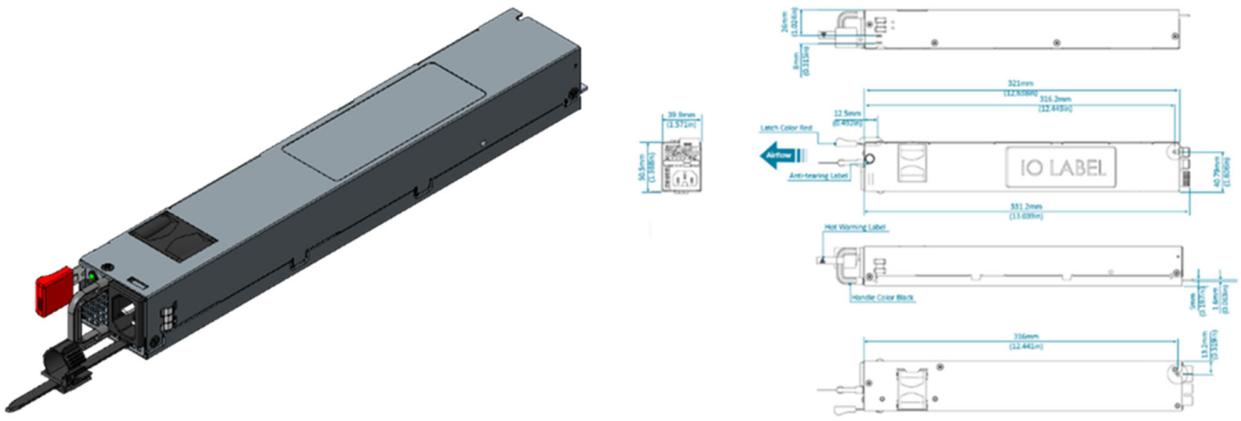


**Figure 5.**

DC Version:

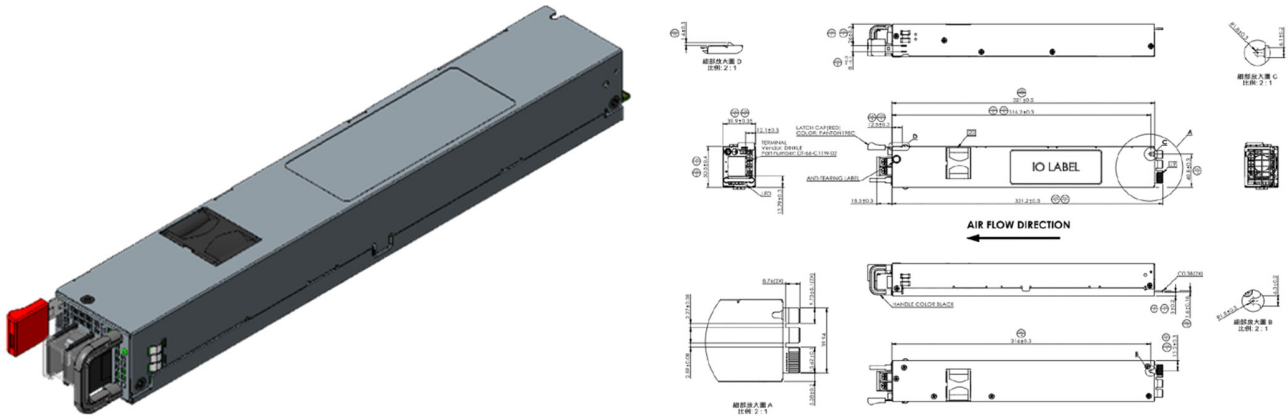


**Figure 6.**

## 4.3 Fan Overview

3+1 Redundant, hot swappable, field replaceable unit (FRU).

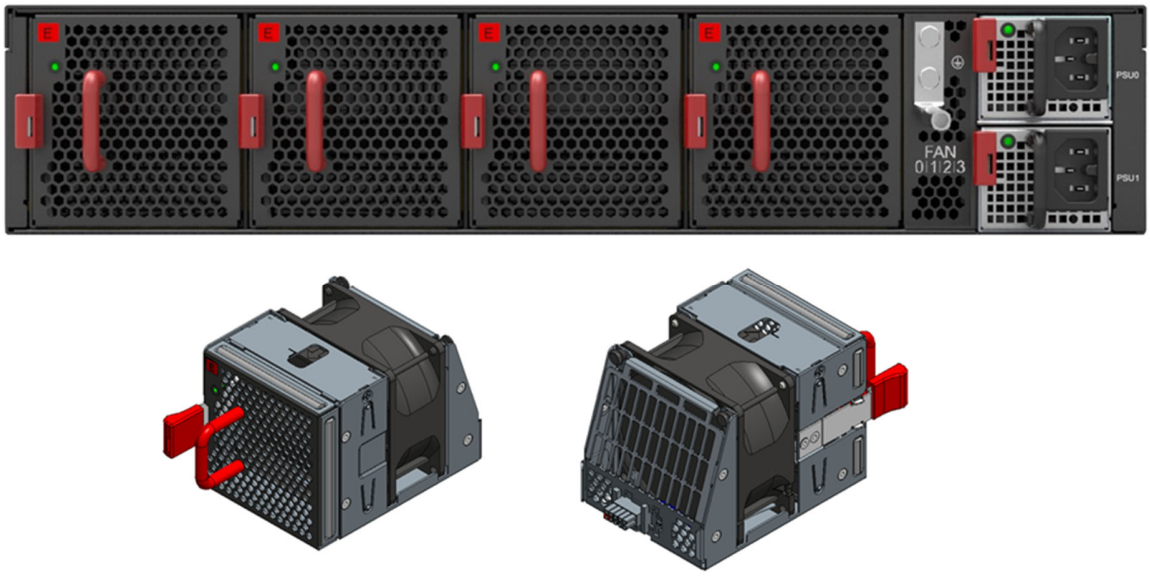


**Figure 7.**

## 4.4 Port Overview

| Port ID | Form Factor | Maximum Support Distance | Support Speed |
|---|---|---|---|
| 0 ~ 95 | SFP28 | Up to 24.85mi(40km) | 1/10/25G |
| 96 ~ 101 | QSFP28 | Up to 49.7mi(80km) | 40/100G |

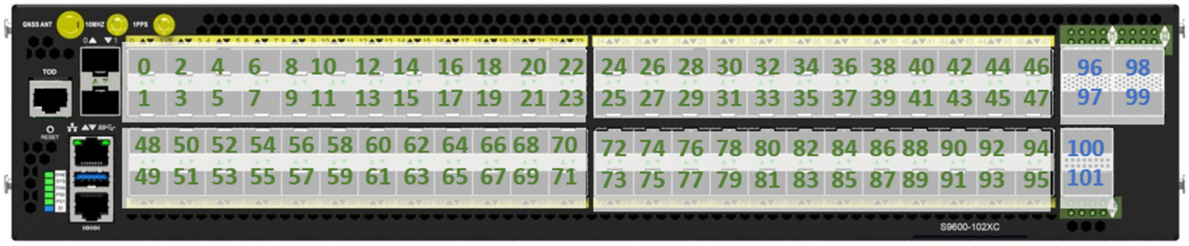


**Figure 8.**

# 5 Rack Mounting

| | |
|---|---|
| Caution | It is recommended that installation be done by at least two trained professionals. One individual should hold the router in position, while the other secures it in place onto the rail slides. |

1. Separate the adjustable mounting rail slides.
   1.1 Pull apart the inner and outer rails until it is locked in place. An audible click can be heard when the rails are locked in place.
   1.2 Pull the white tab forward to unlock the rails in order to completely separate the inner rail from the outer rail. The white tab is located on the inner rail.
   1.3 Once the inner rail is separated, push the tab located on the outer rail to unlock and slide the middle rail back.

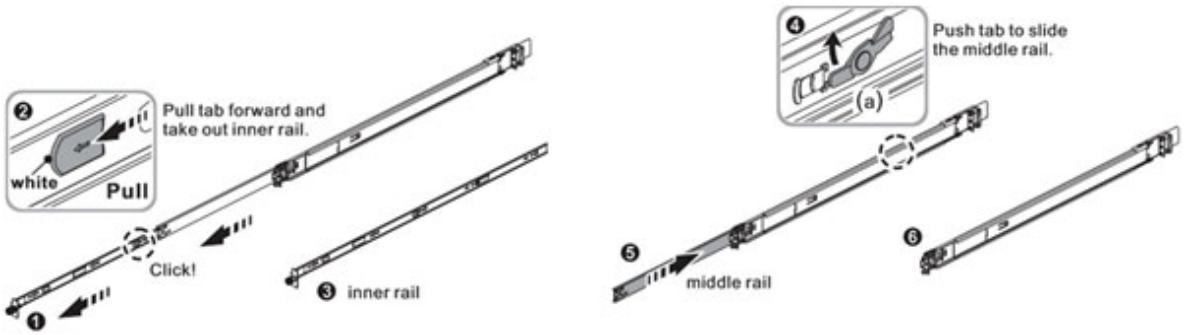


**Figure 9.**

2 Install the inner rails onto the chassis.
   2.1 The inner rail has key-shaped holes where attachment pins on the chassis can be aligned. The chassis has 5 attachment pins on each side, for a total of 10 pins. Fit the key-shaped holes with the attachment pins and pull back to hold the inner rack in place.

| | |
|---|---|
| Note | Make sure the locking screw of the inner rail is positioned at the front of the chassis. |

   2.2 After the attachment pins are secured to the inner rail, lock the inner rail to the chassis using two M4 screws (one on each chassis side).

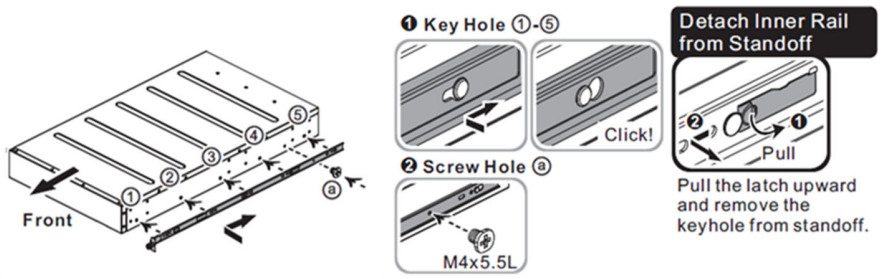


**Figure 10.**

3 Fix the outer rails onto the rack.

3.1 The outer rails have two brackets on the front and rear. Pull back the clip of the rear bracket to attach it onto the rack. An audible click can be hear when the bracket is secured onto the rack.

3.2 Once the rear bracket is secured, pull back the clip of the front bracket attach it to the rack. An audible click can be heard when the bracket is secured onto the rack.

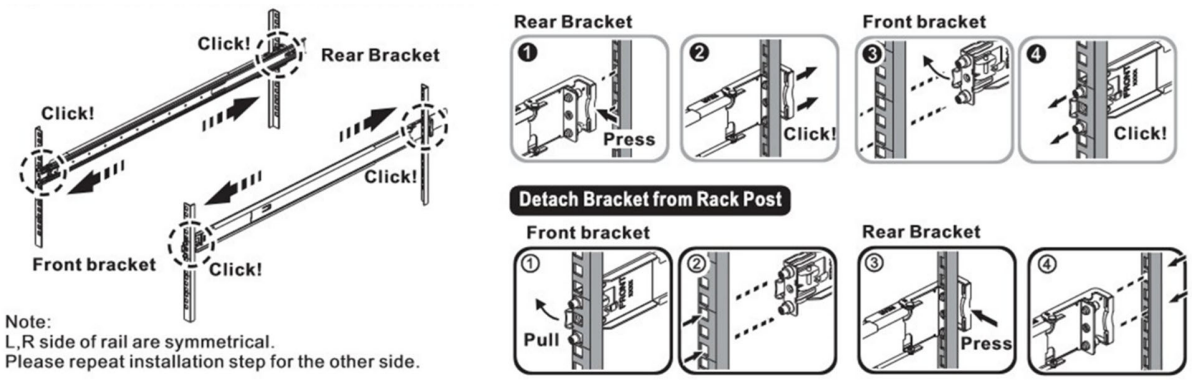


**Figure 11.**

4 Insert the Chassis to complete the installation.

4.1 Pull the middle rail fully extended into lock position, an audible click can be heard when the middle rail is fully extended and locked into position.

4.2 Insert the chassis by lining up the inner rails into the slot of the middle rail.

4.3 Slide the chassis into the middle rail until it hits a stop.

4.4 Push the blue release tab on each rail to unlock the rails and slide the chassis all the way into the rack.

4.5 Lock the chassis into place by using the screw on the front of the inner rail.

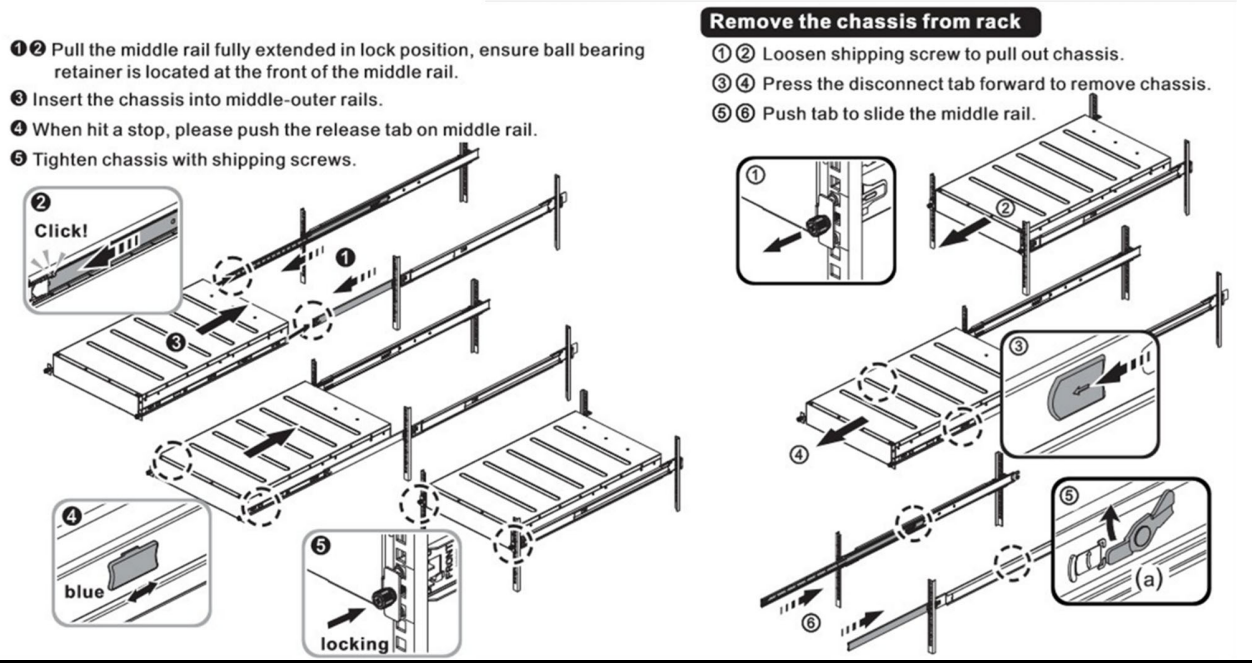
❶❷ Pull the middle rail fully extended in lock position, ensure ball bearing retainer is located at the front of the middle rail.
❸ Insert the chassis into middle-outer rails.
❹ When hit a stop, please push the release tab on middle rail.
❺ Tighten chassis with shipping screws.
Click!
blue
locking
Remove the chassis from rack
①② Loosen shipping screw to pull out chassis.
③④ Press the disconnect tab forward to remove chassis.
⑤⑥ Push tab to slide the middle rail.
(a)

**Figure 12.**

# 6 Installing Fan Modules

The fan modules are hot swappable field replaceable units (FRUs), which can be replaced while the router is operating as long as all the remaining modules are installed and in operation. The fans come pre-installed and the following steps are instructions on how to install a new fan module.

1. Locate the release tab on the fan module. Then press and hold the release tab to unlock the fan module.

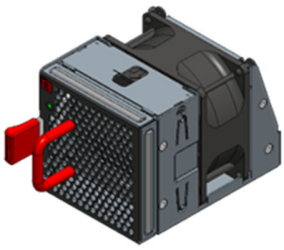

**Figure 13.**

2. While holding down the release tab, grip the fan handle and gently pull the fan module out of the fan bay.

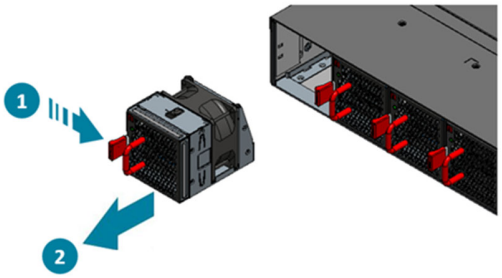


**Figure 14.**

3. Align the new fan module with the fan bay, ensuring that the fan module's power connector is in the correct position.
4. Carefully slide the new fan module into the fan bay and gently push until it is flush with the case.
5. An audible click will be heard when the fan module is installed correctly. The fan module will not go in all the way if it is installed in the wrong direction.

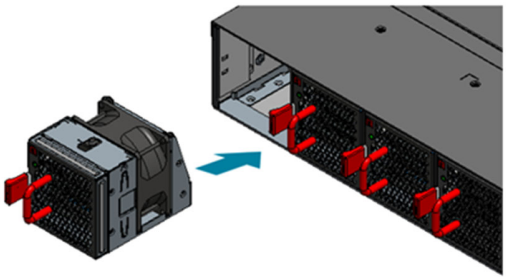

**Figure 15.**

# 7 Installing Power Supply Units

The power supply unit (PSU) is a hot swappable field replaceable unit (FRU) and can be replaced while the router is operating as long as the remaining (second) PSU is installed and in operation. The AC and DC PSU follow the same steps for installation. The PSU comes pre-installed and the following are instructions on how to install a new PSU.

**Safety Notices**
**Caution! Shock hazard!**
TO DISCONNECT POWER, REMOVE ALL POWER CORDS FROM UNIT.

DC:

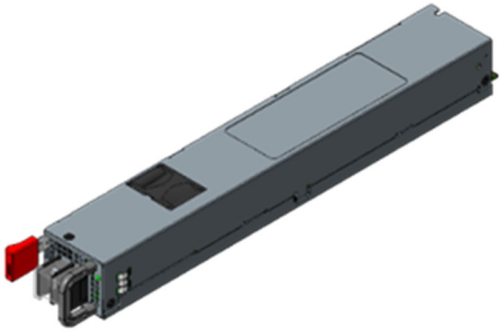

AC:

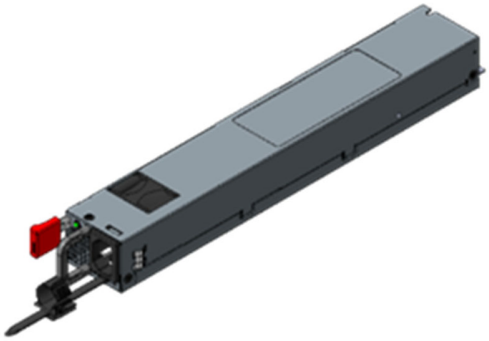

**Figure 16.**

1. Locate the red release tab on the PSU. Then press and hold down the release tab to unlock the PSU.
2. While holding down the red release tab, grip the PSU's handle and firmly pull it out of the power bay.

DC Version:

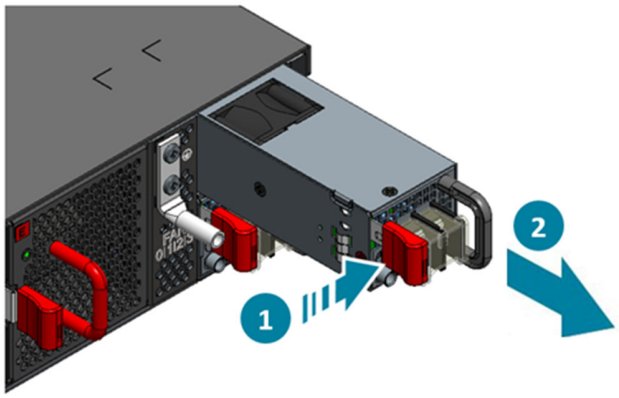


AC Version:

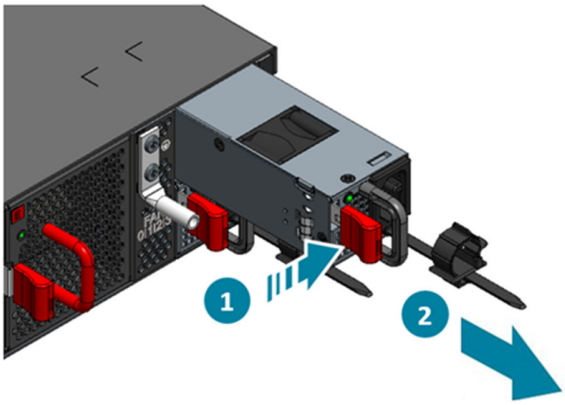


**Figure 17.**

3. Align the new PSU with the power bay, ensuring the PSU's power connector is in the correct position.
4. Carefully slide the new PSU into the power bay and gently push until it is flush with the case.
5. An audible click will be heard when the PSU is installed correctly. The PSU will not go in all the way if it is in the wrong direction.

DC Version:

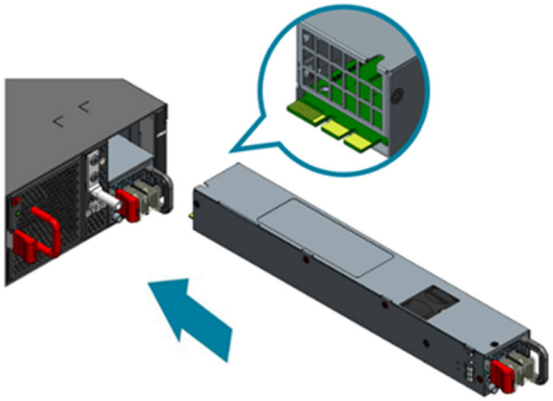

AC Version:

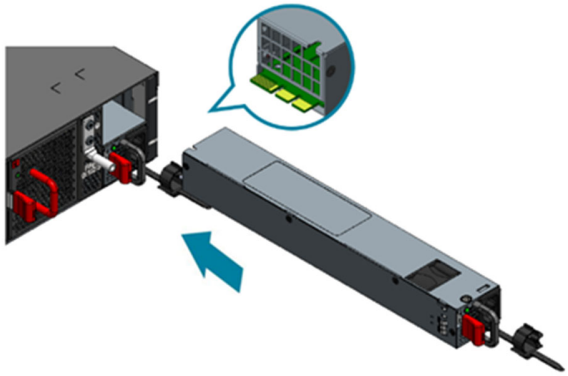

**Figure 18.**

# 8 Grounding the Router

It is recommended that equipment changes be done on a grounded rack system. This will reduce or prevent the risk of shock hazards, equipment damage, and potential of data corruption.

The router can be grounded from the router's case and/or the power supply units (PSUs). When grounding the PSUs, ensure that both PSUs are grounded at the same time in case one of them is removed. A grounding lug and M4 screws and washers are provided with the package contents, however, the grounding wire is not included. The location for securing the grounding lug is at the rear of the case and is covered with a protective label.

The following instructions are for installing the grounding lug onto the case.

1. Before grounding the router, ensure that the rack is properly grounded and in compliance with local regulatory guidelines. Ensure that there is nothing that can obstruct the connection for grounding and remove any paint or materials that may prevent good grounding contact.
2. Strip the insulation from a size #6 AWG grounding wire (not provided within the package contents), leaving 0.5” +/-0.02” (12.7mm +/-0.5mm) of exposed grounding wire.
3. Insert the exposed grounding wire all the way into the hole of the grounding lug (provided with package contents).
4. Using a crimping tool, firmly secure the grounding wire to the grounding lug.

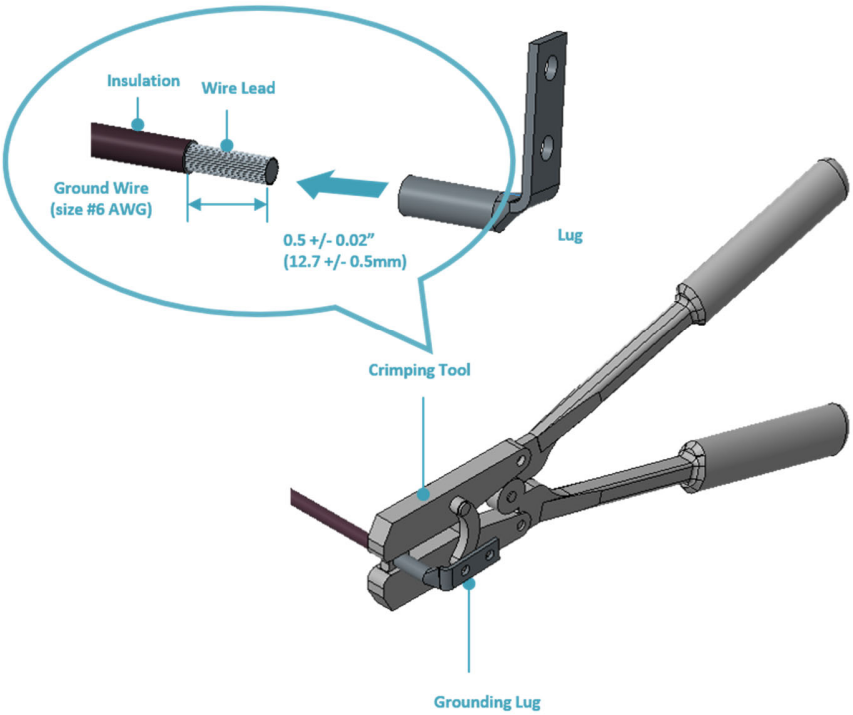


**Figure 19.**

5. Locate the designated location for securing the grounding lug, which is located on the rear of the router and remove the protective label.

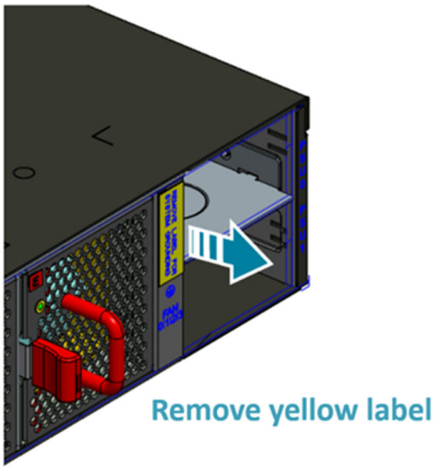


**Figure 20.**

6. Using 2 M4 screws and 2 washers (provided with the package contents), firmly lock the grounding lug to the designated grounding location on the router.

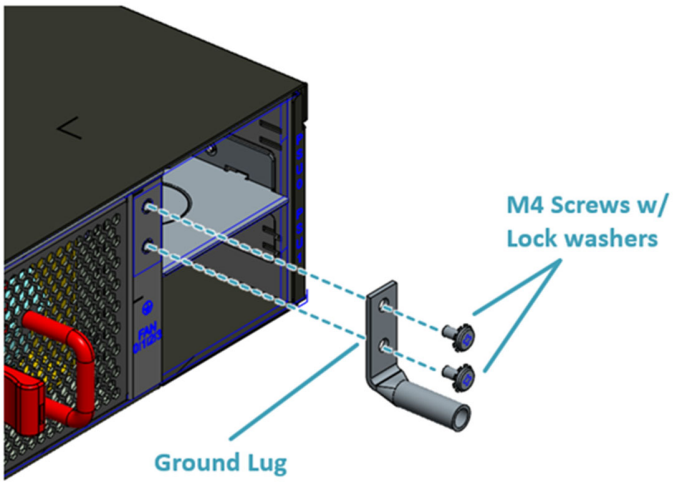


**Figure 21.**

# 9 Connecting Power

## 9.1 DC Version

| | |
|---|---|
| Warning | Dangerous Voltage!<br>• Must be powered off before removing!<br>• Verify that all electrical connections are grounded before powering on<br>• The DC power source must be reliably grounded |

1. Ensure there is enough power to supply the system.
   The maximum system power consumption is 826 watts. It is recommended to ensure that enough power is reserved from the power distribution system before installation. Also, please ensure that both PSUs have been properly installed before powering up the equipment, as the S9600-102XC is designed to support 1 + 1 power redundancy.
2. Attach the DC power cables to the lugs.
   The UL 1015, 8 AWG DC power cable (not provided) must be attached to a two-hole lug before connecting to the PSU. The following instructions are for connecting the DC Power Cable to the lug:
   2.1 Strip the insulation from a DC Power Cable, leaving 0.5” +/-0.02” (12.7mm +/-0.5mm) of exposed cable
   2.2 Insert the exposed DC power cable into the heat shrink tubing, the length of heat shrink tubing should not less than 38.5mm.
   2.3 Insert the exposed DC power cable all the way into the hollow tube of the lug (provided with switch package contents).
   2.4 Using a crimping tool, firmly secure the DC power cable to the lug. It is recommended to not crimp exceeding the lines indicated on the lug, which is also depicted as the cross-section area in the picture on the below.

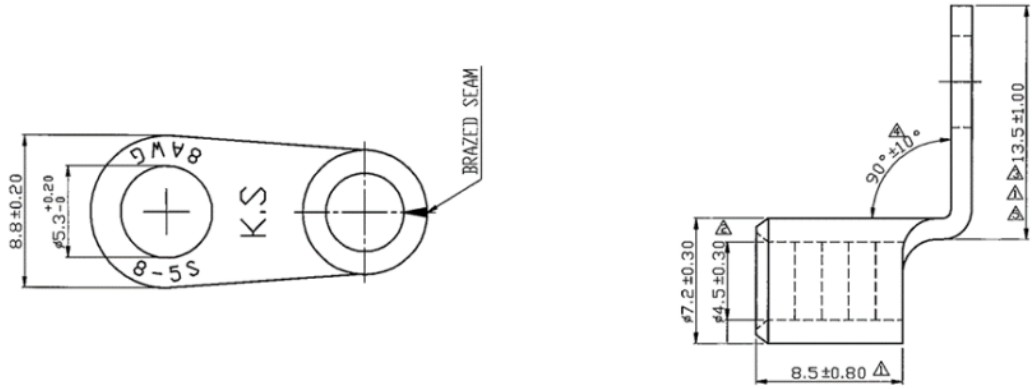


**Figure 22.**

2.5 Move the heat shrink tubing to cover any exposed metal on the DC power cable and lug.

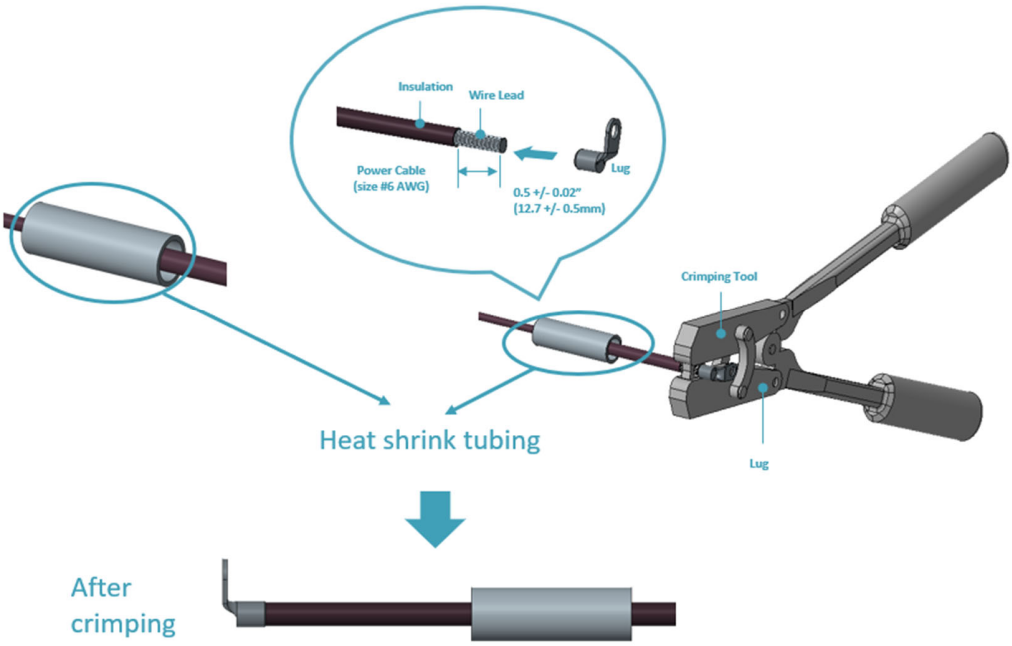


**Figure 23.**

2.6 Use a heat source to secure the heat shrink tubing in place. Allow the heat shrink tubing to cool before attaching the DC power cable. An example of the installed DC version with insulation material as below.

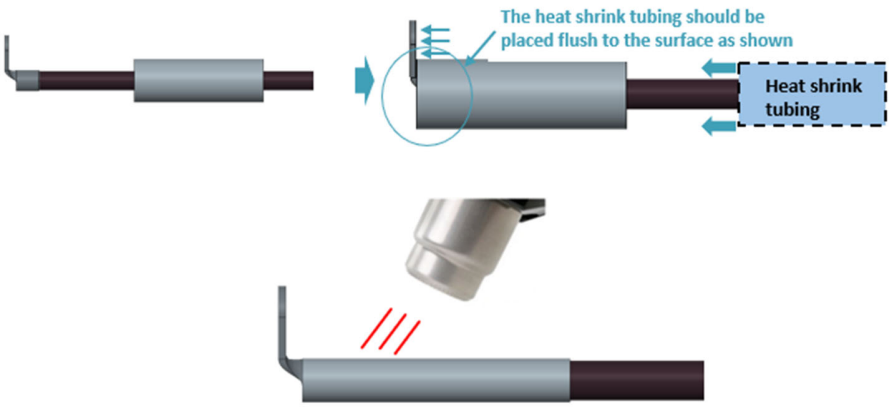


**Figure 24.**

3. Attach the power cable.
   Locate the DC power screw-type terminal block located on the PSU. Remove the plastic cover that is protecting the terminal block by pushing from the top or bottom of the cover and flipping open the cover outwards. Secure the one-holed lugs (with the DC power cable attached) to the terminal block as depicted in the following figure.

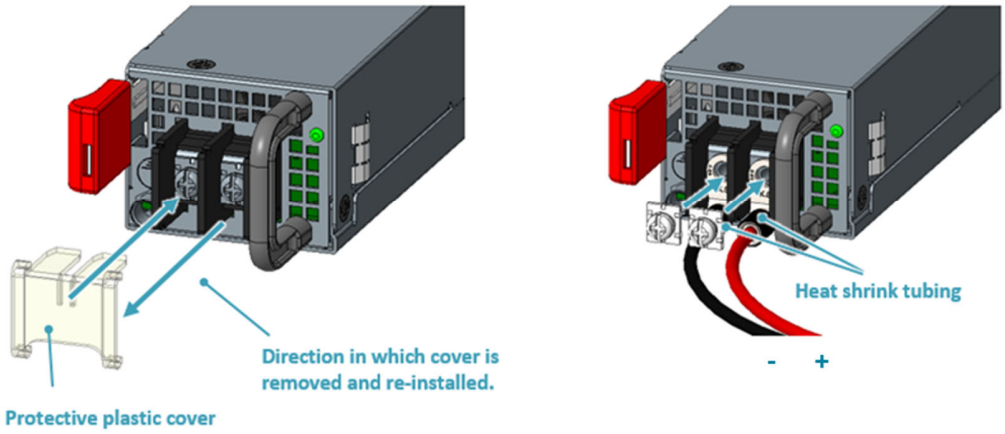


**Figure 25.**

4. Tighten the screws to the specified torque.
   Tighten the screws to a torque value of 14.0+/-0.5kgf.cm. If the torque is not enough, the lug will not be secure and may cause malfunctions. If the torque is too much, the terminal block or lug may be damaged. Secure the plastic cover back onto the terminal block. The figure below depicts how it should look once the lug is attached and the protective plastic cover reinstalled.

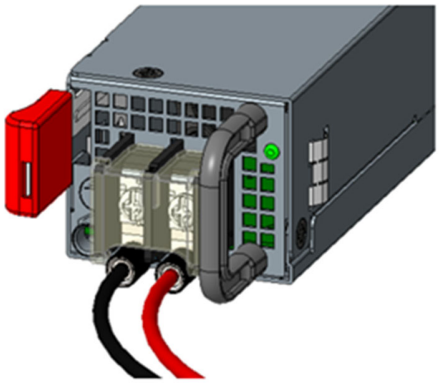

**Figure 26.**

5. Feed DC power into the system.
   The PSU will immediately output 12V and 5VSB to the system with a -40 to -75V DC power source. The PSU has a built in 60A, fast acting fuse based on the PSU maximum capacity, which will act as a second tier system protection in case the power distribution unit's fuse is not functioning.
6. Verify that the power supply is operating.
   If connected correctly, when turned on, the LED on the PSU will light up with a Green color designating normal operation.

## 9.2 AC Version

1. Ensure there is enough power to supply the system.
   The maximum system power consumption is 822.3 watts. It is recommended to ensure that enough power is reserved from the power distribution system before installation. Also, please

ensure that both PSUs have been properly installed before powering up the equipment, as the S9600-102XC is designed to support 1 + 1 power redundancy.

2. Attach the power cable.
   Locate the AC inlet connector on the PSU and plug the AC power cable (250VAC 15A, IEC60320 C15) into the AC inlet connector.
3. Feed AC power into the system.
   The PSU will immediately output 12V & 5VSB to the system with a 100-240V, AC power source. The PSU has a built-in 16 amperes, fast acting fuse based on the PSU maximum capacity, which will act as a second tier system protection in case the power distribution unit's fuse is not functioning.
4. Verify that the power supply is operating.
   If connected correctly, when turned on, the LED on the PSU will light up with a solid Green color designating normal operation.

# 10 Verifying System Operation

## 10.1 Front Panel LED

Verify basic operations by checking the system LEDs located on the front panel. When operating normally, the SYS, FAN, PS0 and PS1 LEDs should all display green.

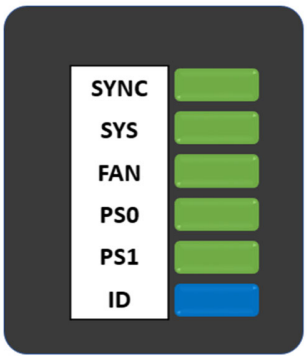


**Figure 27.**

| LED Condition | Equipment Status |
|---|---|
| SYNC | |
| OFF | System timing synchronization is disabled or in free-run mode. |
| Solid Green | System timing core is synchronized to PTP packet(phase) or one of the external timing sources, frequency is also locked. |
| Blinking Green | System is synchronized with PTP packet (frequency profile) or external SyncE clock sources. |
| Solid Amber | System timing core is in acquiring state or holdover mode. |
| Blinking Amber | System timing synchronization fail, or acquiring/holdover time out |
| SYS | |
| OFF | No power |
| Solid Green | Host CPU/BMC boot complete |
| Solid Amber | Power is up but Host CPU/BMC boot failed |
| FAN | |
| OFF | FAN modules are not initialized |
| Solid Green | All FAN modules are working normal |
| Blinking Amber | Fan fail: one or more Fans need service |
| PS0 | |
| OFF | No Power |
| Solid Green | PSU0 is working normal |
| Blinking Amber | PSU0 fail (PSU0 need service) |
| PS1 | |
| OFF | No Power |
| Solid Green | PSU1 is working normal |
| Blinking Amber | PSU 1 fail (PSU1 need service) |
| ID | |

| | |
|---|---|
| OFF | No Power |
| Blinking Blue | Enable beacon feature |

## 10.2 PSU FRU LED

Additional information about PSU status can be obtained by the LEDs located on the PSU itself.

| LED Condition | Equipment Status |
|---|---|
| OFF | No input power to all power supplies. |
| Green | Output ON and OK. |
| Red | Power supply critical event causing a shutdown, failure, overcurrent, short circuit, over voltage, fan failure, and/or over temperature. |
| Blinking Green | PSU standby state input power present / Only +5VSB on. |
| Blinking Red | Input power cord unplugged or input power lost with a second power supply in parallel still with AC input power. |
| Blinking between Greenand Red | Power supply warning events where the power supply continues to operate; high temp, high power, high current, and/or slow fan. |
| Blinking Green | Power supply firmware updating (Boot-loader mode). |

## 10.3 Fan FRU LED

Additional information about fan status can be obtained by the LEDs located on the fan itself.

| LED Condition | Equipment Status |
|---|---|
| OFF | No input power |
| Green | Fan FRU function normal |
| Amber | Fan FRU abnormal, service is required |

# 11 Initial System Setup

Establishing a first-time serial connection.

To assign an IP address, you must have access to the command line interface (CLI). The CLI is a text-based interface that can be accessed through a direct serial connection to the router.

Access the CLI by connecting to the console port. After you assign an IP address, you can access the system through Telnet or SSH by Putty, TeraTerm or HyperTerminal.

Perform the following steps to access the router through a serial connection:

1. Connect the console cable.
   - The console can be connected with the IOIO port.
   - To connect the console using the IOIO port, locate the port labelled IOIO, then plug a serial cable into the console port and connect the other end to the PC or laptop. Cable types may vary depending on the router model.

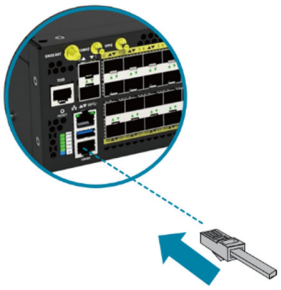

**Figure 28.**

2. Check for serial control availability.
   Disable any serial communication programs running on the computer such as synchronization programs to prevent interference.
3. Launch a terminal emulator.
   Open a terminal emulator application such as HyperTerminal (Windows PC), Putty or TeraTerm and configure the application. The following settings are for a Windows environment (other operating systems may vary):
   - Baud rate: 115200 bps
   - Data bits: 8
   - Parity: None
   - Stop bits: 1
   - Flow control: None
4. Login to the device.
   After the connection is established, a prompt for the username and password displays. Enter the username and password to access the CLI. The username and password should be provided by the Network Operating System (NOS) vendor.

# 12 Cable Connections

## 12.1 Connecting the USB Extender Cable

Connect the USB 3.0 A Type plug (male connector) into the USB port (female connector) located on the front panel of the router. This USB port is a maintenance port.

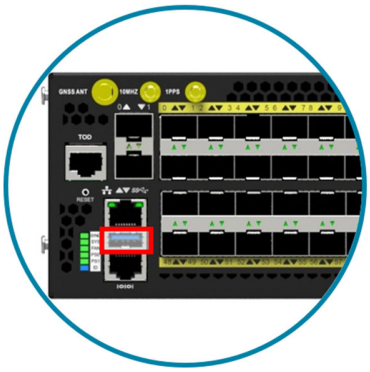

**Figure 29.**

## 12.2 Connecting a Cable to the ToD Interface

| | |
|---|---|
| *Note* | The maximum length of the straight-through Ethernet cable should not be more than 3 meters. |

1. Connect one end of a straight-through Ethernet cable to the GNSS unit
2. Connect the other end of the straight-through Ethernet cable to the port marked “TOD” located on the front panel of the router.

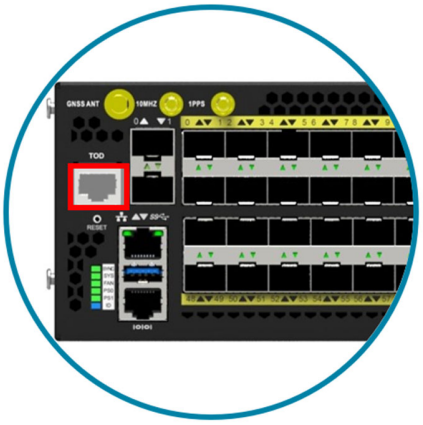

**Figure 30.**

## 12.3 Connecting the GNSS Interface

Connect an external GNSS antenna with an impedance of 50 ohms to the port marked “GNSS ANT” located on the front panel of the router.

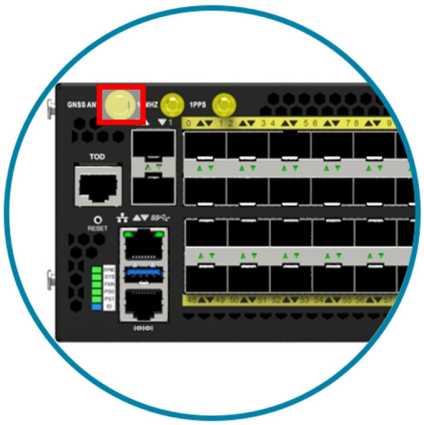

**Figure 31.**

## 12.4 Connecting the 1PPS Interface

| | |
|---|---|
| ***Note*** | The maximum length of the 1PPS coaxial SMB/1PPS Ethernet cable should not be more than 3 meters. |

Connect an external 1PPS cable with an impedance of 50 ohms to the port labelled “1PPS”.

**Figure 32.**

## 12.5 Connecting the 10MHz Interface

| | |
|---|---|
| **Note** | The maximum length of the 10MHz coaxial SMB cable should not be more than 3 meters. |

| | |
|---|---|
| **Note** | This platform supports either GNSS or SMA-10MHz input at a time.<br>The SMA-10MHz input is disabled when the GNSS antenna is connected. |

Connect an external 10MHz cable with an impedance of 50 ohms to the port labelled "10MHz”.

**Figure 33.**

## 12.6 Connecting the Transceiver

| | |
|---|---|
| **Note** | To prevent over tightening and damaging the optic fibers, it is not recommended to use tie wraps with optical cables. |

Read the following guidelines before connecting the transceiver:

- Before installing the router, take into consideration rack space requirements for cable management and plan accordingly.
- It is recommended to use hook-and-loop style straps to secure and organize the cables.
- For easier management, label each fiber-optic cable and record its respective connection.
- Maintain a clear line of sight to the port LEDs by routing the cables away from the LEDs.

| | |
|---|---|
| **Caution** | Before connecting anything (cables, transceivers, etc.) to the router, please ensure to discharge any static electricity that may have built up during handling. It is also recommended the cabling be done by a professional who is grounded, such as by wearing an ESD wrist strap. |

The following the steps below for connecting a transceiver.

1. Remove the new transceiver from its protective packaging.
2. Remove the protective plug from the transceiver itself.
3. Place the bail (wire handle) in the unlocked position and align the transceiver with the port.
4. Slide the transceiver into the port and gently push until it is secured in place. An audible click can be heard when the transceiver is secured in the port.

## 12.7 Installing an Antenna

| | |
|---|---|
| **Note** | Make sure the satellite signal strength is greater than 30db, when using a GNSS simulator for testing. |

Read the following guidelines before installing your antenna.

- The S9600-102XC supports various types of receiver frequency types, including GPS/QZSS L1 C/A, GLONASS L10F, BeiDou B1 SBAS L1 C/A: WAAS, EGNOS, MSAS, GAGAN Galileo E1B/C.
- The minimum sensitivity of the receiver frequency (RF) is -166dBm.
- The S9600-102XC supports both passive and active GNSS antennas, and will automatically detect which type of antenna is installed.
- If the received signal strength is lower than 30db, the GNSS receiver will fail to produce accurate location estimates.

To optimize antenna performance, it is highly recommended to choose a roof or top floor that is free from any signal blockage or obstruction.

Read the following guidelines before installing an active antenna:

- When an active antenna is installed, the S9600-102XC can supply up to 5V DC/150mA on the GNSS port.
- If any GNSS amplifier, DC-blocked or cascaded splitter is inserted, the GNSS detection function might be affected, resulting in GNSS satellite clock errors.
- We recommend that you use an active antenna equipped with 50 ohm impedance matching, 5V DC power supply capable, max. NF 1.5dB and 35~42dB internal LNA gain to get a strong enough signal strength in various weather conditions.
- To prevent damages caused by power surges or lightning strikes, ensure a surge protector is attached to the GNSS antenna.

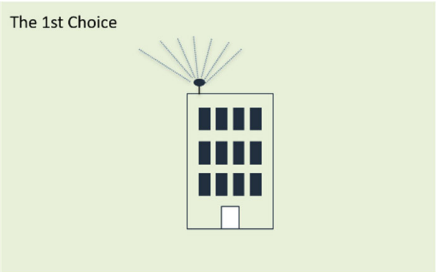

**Figure 34.**

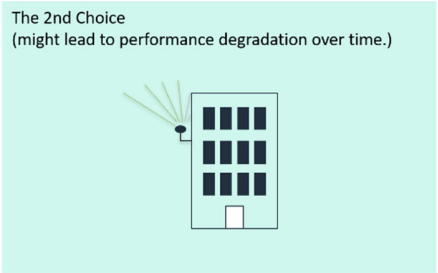


**Figure 35.**

# 13 Cautions and Regulatory Compliance Statements

## 13.1 Cautions and Regulatory Compliances

**Safety Notices**
**Caution! Shock hazard!**
TO DISCONNECT POWER, REMOVE ALL POWER CORDS FROM UNIT.

**Electrical Hazard:** Only qualified personnel should perform installation procedures.
**Risques d'électrocution:** Seul un personnel qualifié doit effectuer les procedures d'installation.

**Warning:** Network Switch power supplies do not have switches for turning the unit on and off. Before servicing, disconnect all power cords to remove power from the device. Make sure that these connections are easily accessible.

**Avertissement:** Network Switch alimentations ne sont pas des interrupteurs pour allumer l'appareil et en dehors. Avant l'entretien, débranchez tous les cordons d'alimentation pour couper l'alimentation de l'appareil. Assurez-vous que ces connexions sont facilement accessibles.

**Caution:** Before mounting the device, ensure that the rack can support it without compromising stability. Otherwise, personal injury and/or equipment damage may result.

**Caution**: This unit must be installed indoors. The unit, AC power supplies, DC power supplies, and its cables are not designed for outdoor use.

**Caution**: Use of controls or adjustments or performance of procedures other than those specified herein may result in hazardous radiation exposure.

**Warning**: Do not use optical instruments to view the laser output. The use of optical instruments to view laser output increases eye hazard. Use only UL/CSA, IEC/EN60825-1/-2 recognized pluggable modules.

**Avertissement**: Ne pas utiliser d'instruments optiques pour voir la sortie du laser. L'utilisation de instruments optiques pour afficher la sortie laser augmente les risques oculaires. Utilisez uniquement UL/CSA, IEC/EN60825-1 /-2 reconnu modules enfichables.

**Warning**: This equipment must be grounded. Do not defeat the ground conductor or operate the equipment without correctly grounding the equipment. If there is any uncertainty about the integrity of the equipment's grounding, please contact the electrical inspection authority or a certified electrician.

**＜電源コードセットに関する使用上の注意事項＞**
**付属の「ＡＣ電源コードセット」は、本製品専用のものです。他の電気機器には絶対に使用しないでください。**

### Federal Communications Commission (FCC) Notice

This device complies with Part 15 of FCC rules. Operation is subject to the following two conditions: (1) this device may not cause harmful interference, and (2) this device must accept any interference received, including interference that may cause undesired operation.

**Note**

This equipment has been tested and found to comply with the limits for a class A digital device, pursuant to Part 15 of the FCC rules. These limits are designed to provide reasonable protection against harmful interference when the equipment is operated in a commercial environment. This equipment uses, generates, and can radiate radio frequency energy and if not installed in accordance with the operator's manual, may cause harmful interference to radio communications. Operation of this equipment in a residential area is likely to cause interference in which case the user will be required to correct the interference at his own expense.

| | |
|---|---|
| **Warning** | This equipment must be grounded. Do not defeat the ground conductor or operate the equipment without correctly grounding the equipment. If there is any uncertainty about the integrity of the equipment's grounding, please contact the electrical inspection authority or a certified electrician. |

### Industry Canada Notice

**CAN ICES-003 (A)/NMB-003(A)**

This digital apparatus does not exceed the class A limits for radio noise emissions from digital apparatus set out in the Radio Interference Regulations of the Canadian Department of Communications.

Le présent appareil numérique n'émet pas de bruits radioélectriques dépassant les limites applicables aux appareils numériques de la class A prescrites dans le Règlement sur le brouillage radioélectrique édicté par le ministère des Communications du Canada

### Class A ITE Notice

| | |
|---|---|
| **Warning** | This equipment is compliant with Class A of CISPR 32. In a residential environment this equipment may cause radio interference. |

### VCCI Notice

This is Class A equipment. Operation of this equipment in a residential environment could cause radio interference. In such a case, the user may be required to take corrective actions.

この装置は、クラスA機器です。この装置を住宅環境で使用すると電波妨害を引き起こすことがあります。この場合には使用者が適切な対策を講ずるよう要求されることがあります。 VCCI－A

警告使用者：
此為甲類資訊技術設備，於居住環境中使用時，可能會造成射頻擾動，在此種情況下，使用者會被要求採取某些適當的對策。

此为A级产品，在生活环境中，该产品可能会造成无线电干扰。

在这种情况下，可能需要用户对干扰采取切实可行的措施。

**Installation Location Statement**

| | |
|---|---|
| Note | It is recommended that the device be installed only in a server room or computer room where access is:<br>➢ Restricted to qualified service personnel or users familiar with restrictions applied to the location, reasons therefore, and any precautions required.<br>➢ Only afforded by the use of a tool or lock and key, or other means of security, and controlled by the authority responsible for the location.<br>Suitable for installation in Information Technology Rooms in accordance with Article 645 of the National Electrical Code and NFPA 75. |

**Cautions and regulatory compliance statements for NEBS:**

- "Suitable for installation as part of the Common Bonding Network (CBN)"
- "An external Surge Protection Device (SPD) must be used with AC powered equipment and that the Surge Protection Device is to be installed at the AC power service entrance."
- "System can be installed in Network Telecommunications Facilities where the National Electric Code applies"
- The approximate system boot time when the AC (or DC) power source is connected is 80 secs in Ubuntu Linux system. (The boot up time will vary depending on different NOS vendors)
- The approximate link time for the OOB Ethernet port when reconnected is 40 secs base on Ubuntu Linux system (The link time will vary depending on different NOS vendors)
- The design of the equipment is that the RTN terminal should be isolated from the chassis or rack. (The DC input terminals is DC-I (Isolated DC return))
- "WARNING: The intra-building port OOB (Ethernet) of the equipment or subassembly is suitable for connection to intra-building or unexposed wiring or cabling only. The intrabuilding port(s) of the equipment or subassembly MUST NOT be metallically connected to interfaces that connect to the OSP or its wiring for more than 6 meters (approximately 20 feet). These interfaces are designed for use as intra-building interfaces only (Type 2, 4, or 4a ports as described in GR-1089) and require isolation from the exposed OSP cabling. The addition of Primary Protectors is not sufficient protection in order to connect these interfaces metallically to an OSP wiring system."

ufiSpace

Unifying Cloud & Carrier Networks

www.ufispace.com